DRIVE TRAIN, FRONT GEARCASE MOUNTING - Z26NEY99A4/B4/A6/B6 (C760065)

2026 RZR - RZR XP S 1000 ULTIMATE (R01) - Z26NEY99A4/B4/A6/B6

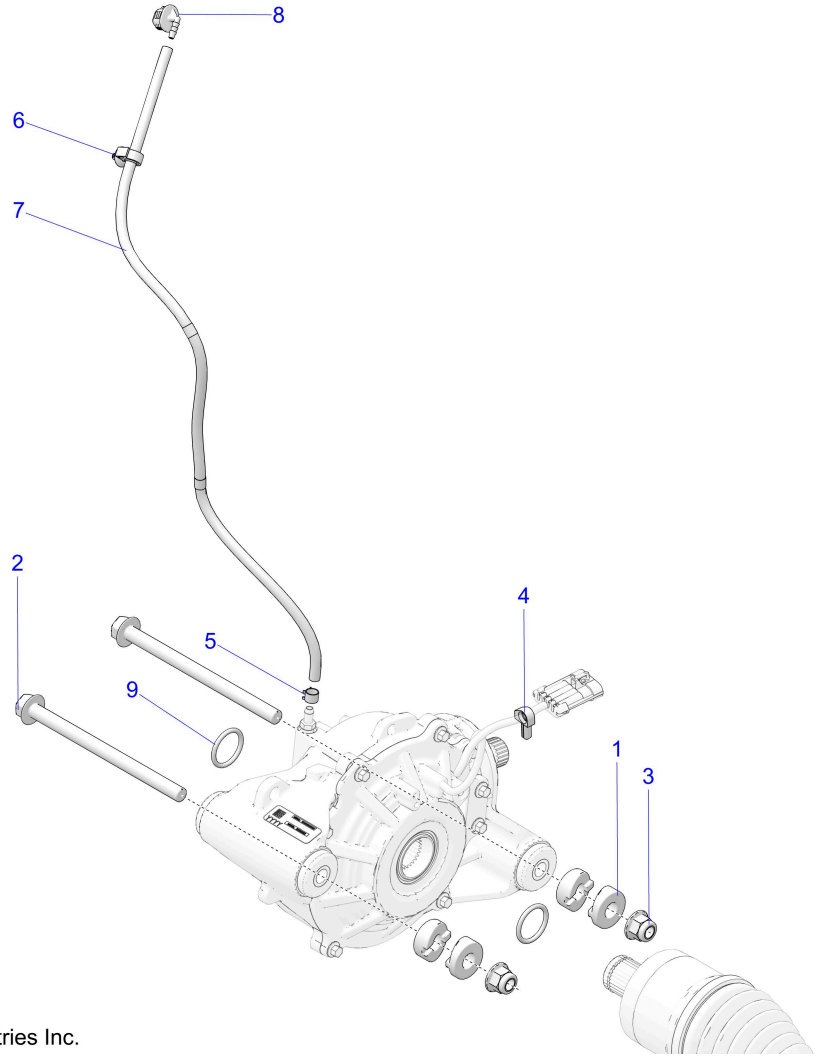

© 2025 Polaris Industries Inc.

C760065

Reference #	*Part#*	*Description*	*Quantity*
1	5639729	ANCHOR-WEDGE LOCK	4
2	7521334-170	SCR-HXFL-M12X1.75X170 10.9 ZFB	2
3	7548030	NUT-HXFL-M12X1.75 8 ZTB NYL	2
4	7670102	CLIP-SILENCER BOX-C,98 INDY	1
5	7080307	CLAMP-HOSE, (LARGE GREEN)	1
6	7670116	CLIP, ROUTING, .472 B.D., HINGED	1
7	2522462	ASM-VENT LINE,FRONT DRIVE	1
8	5454069	FITTING-VENT LINE,90	1
9	5418014	O-RING,28.17X3.53,VITON,60A	2

Copyright 1996-2026 Polaris Industries U.S.A All rights reserved.